Gigabit Ethernet Compliance and Interoperability Services

Overview

MultiLane has been supplying the high speed I/O industry with leading test and measurement instruments for over a decade. Our hardware has validated technologies from transceiver manufacturers, system companies, to hyperscalers, and IC developers all around the world. Transitioning to offering both compliance products and services is a natural progression for the company, and reflects MultiLane's evolution as a solutions provider in the industry. We are expanding this focus with our new Compliance and System Interoperability Lab operating out of our headquarters in Lebanon.

Module and cable vendors compete and collaborate in an ever-evolving landscape maintained by a set of comprehensive compliance standards. MultiLane's services hold our customers to these standards with compliance testing and enable them to develop their technologies further with our specialized system and interoperability testing.

A vital component for operating in the industry, compliance testing ensures your devices are up to the standards put forth by organizations like the IEEE.

System and interoperability testing is MultiLane's more customized approach, giving you a clearer picture of how your devices will function in a real-life networking environment. Our customized solutions include BER switch, Pre- and post FEC BER link, and CMIS testing.

With our Compliance and System Interoperability Lab, MultiLane is ready to support all your testing needs. To inquire or receive a quote for your test services please contact our sales department at sales@multilaneinc.com.

Innovation for the next generation

Supported Devices Under Tests (DUTs)

The MultiLane lab currently supports bit rates of up to 400G for transceivers and cables in the following form factors. For other form factors or standards, please contact us as this list is subject to expansion.

Transceivers

Form Factor	Speed	Class	Image
QSFP	40G	ER4/LR4/SR4	
	100G	SR4/LR4/ER4/CWDM4/SWDM4/FR1/DR1	
QSFP–DD	400G	DR4/DR8/FR4/FR8/LR4/LR8/SR16	
SFP	10G	SR/LR/ER	
	25G		
OSFP	400G	DR4/DR8/FR4/FR8/LR4/LR8/SR16	

Cables

Form Factor	Speed	Class	Image
QSFP–DD **QSFP** **OSFP**	40G 100G 200G 400G	Active Optical Cable (AOC)	
		Active Electrical Cable (AEC)	
		Direct Attach Copper (DAC)	
		Active Copper Cable (ACC)	

Innovation for the next generation

Compliance Test Services

Ensure your devices are up to industry standards with state-of-the-art compliance testing solutions.

Electrical Tests

MultiLane offers the following electrical tests:

Test Category	Publication	Subset of Supported Measurements
Electrical TX Test	40G (XLAUI): 802.3 Table 83A-1 100G (CAUI-4): 802.3bm Table 83E-3 200G/400G (GAUI-8): 802.3bs Table 120E-3	• Rise Time • Fall Time • Near End ESMW • Near End Eye Height • Far End ESMW • Far End Eye Height • Differential output voltage • Differential PK-PK Input • Voltage
Electrical RX Test	40G (XLAUI): 802.3 Table 83A-2 100G (CAUI-4): 802.3bm Table 83E-3 200G/400G (GAUI-8): 802.3bs Table 120E-3	• BER • Stress Input Low & High Loss Channel • JTOL*
* PAM4 Jitter injection supported up to 4 MHz		

Electrical TX Test Setup

A MultiLane BERT sends an electrical signal to the DUT. The DUT then transmits a characterization signal to the ML4025 Electrical Scope.

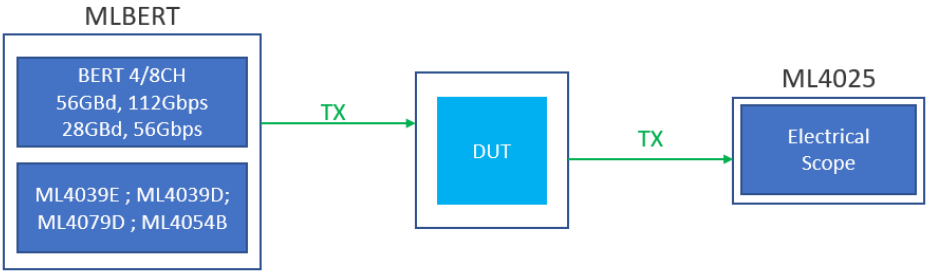

Electrical RX Test Setup

An electrical signal is sent through the DUT – transmitted and received – from a MultiLane BERT.

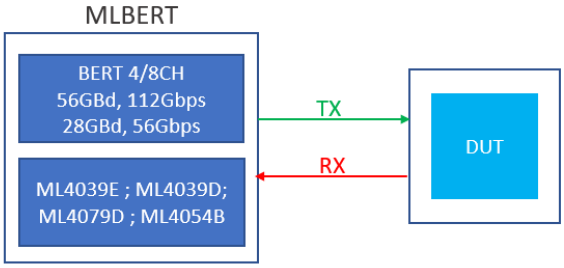

Innovation for the next generation

Optical Tests

MultiLane offers the following Optical tests:

Test Category	Publication	Subset of Supported Measurements
Optical TX Test	DR1/4 (400G): 802.3bs Table 124-6 FR1/4 (400G): 100G Lambda MSA SR4/SR16 (100G): 802.3bm Table 95-6 LR4/ER4 (40G): 802.3bm Table 87-7 LR4/FR4 (200G): 802.3bs Table 122-9 LR8/FR8 (400G): 802.3bs Table 122-10 SW/SR (10G): 802.3 Table 52-7	• Transmit Power (OMA, AOP) • TDEC(Q) • Extinction Ratio • Transmitter Eye Mask Definition • Rise Time • Fall Time
Optical RX Test	DR1/4 (400G): 802.3bs Table 124-7 FR1/4 (400G): 100G Lambda MSA Table 2.4 SR4/SR16 (100G): 802.3bm Table 95-7 LR4/ER4 (40G): 802.3bm Table 87-8 LR4/FR4 (200G): 802.3bs Table 122-11 LR8/FR8 (400G): 802.3bs Table 122-12 SW/SR (10G): 802.3 Table 52-9	• Receiver sensitivity • Waterfall curve • SRS for 25G NRZ

Optical TX Test Setup

A MultiLane BERT sends an electrical signal to the DUT. The DUT then transmits an optical signal to the MLO4034 Optical Switch Box, which in turn transmits an optical characterization signal to the ML4015D Optical Scope.

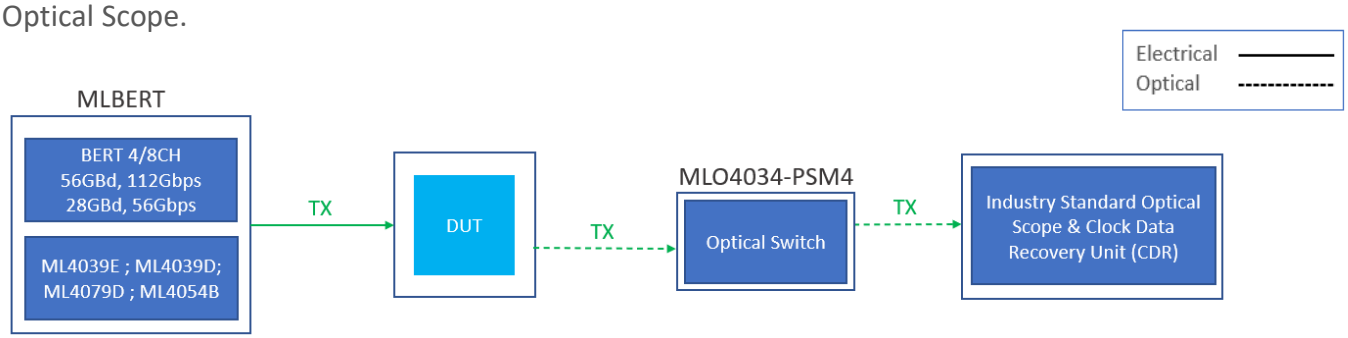

Optical RX Test Setup

A MultiLane BERT sends an electrical signal to the DUT. The DUT then transmits an optical signal to the MLO4034 Optical Switch Box, which includes a variable optical attenuator to control the optical power level. The signal is then looped back through to the DUT and then to the BERT.

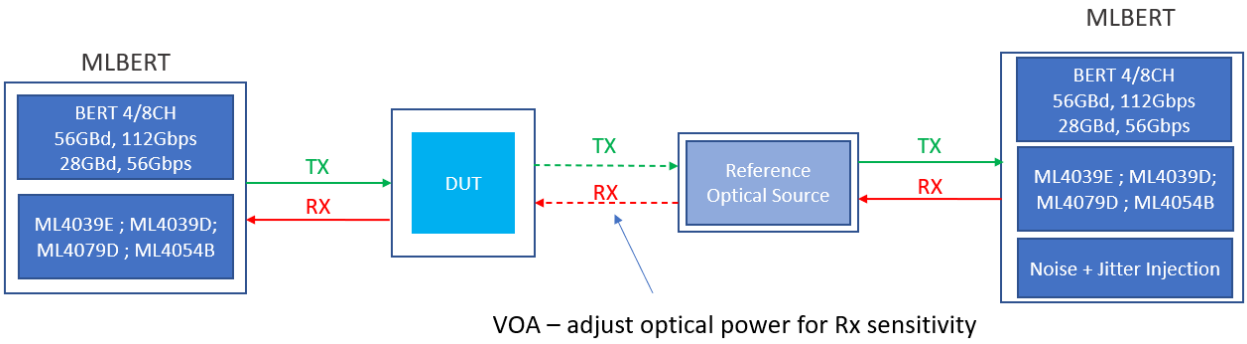

Innovation for the next generation

VNA Tests

Trace Number	Measurements
1	Output return loss Sdd22
2	Output common to differential mode conversion Scd22
3	Input return loss Sdd11
4	Input differential to common mode conversion Sdc11

VNA Test Setup

The VNA is connected to MCB (chosen depending on the DUT's form factor) through two differential ports for both Tx and Rx and looped back through DUT.

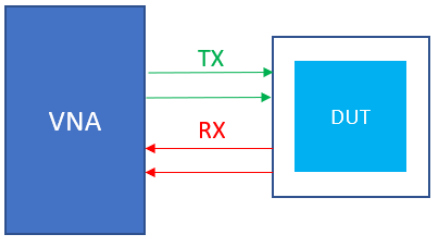

Multi-Corner Environment Test

Validate the spec compliance of your devices over a range of operating conditions, with temperatures ranging from -40 °C to 130 °C and voltages between 3.1 V and 3.45 V. The Multi-Corner Environment Test can be used to assess one nominal condition at a time, placing the DUT in any combination of temperatures (high/low) and voltages (high/low).

Innovation for the next generation

System Interoperability Test Services

With the introduction of 100GE and 400GE data centers switches, MultiLane Interoperability test services enable system-level insight. Customers can assess the performance of their pluggable DUTs through the lens of their end customers in real life networking environments thanks to diagnostic capabilities (FEC statistics, BER, optical diagnostics, etc.) offered by these platforms.

System Interoperability Tests

MultiLane offers four different kinds of system interop tests:

- BER switch test
- Pre-FEC BER link test
- Post-FEC SER link test
- CMIS testing

BER Switch Test Setup

A signal is sent from the switch through the DUT and then looped back through the MLO4034 Optical Switch Box to control the optical power level.

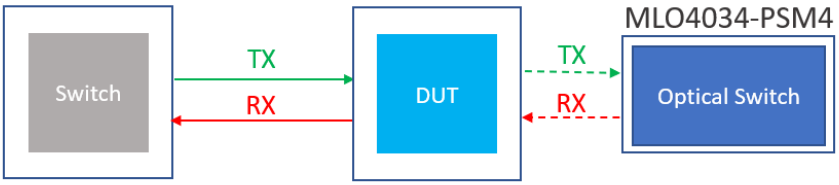

Pre-FEC BER / Post-FEC SER Link Test Setups

The ML4054B BERT transmits real RS(544) or RS(528) Forward Error Correction (FEC)-encoded idle ethernet packet traffic to the network switch via a linked pair of optical DUTs. The power level of the optical signal is controlled by the Switch Box Variable Optical Attenuator (VOA) before it is routed to a second DUT that terminates in the Ethernet switch. This setup enables bidirectional pre- and post-FEC link testing from one platform to another.

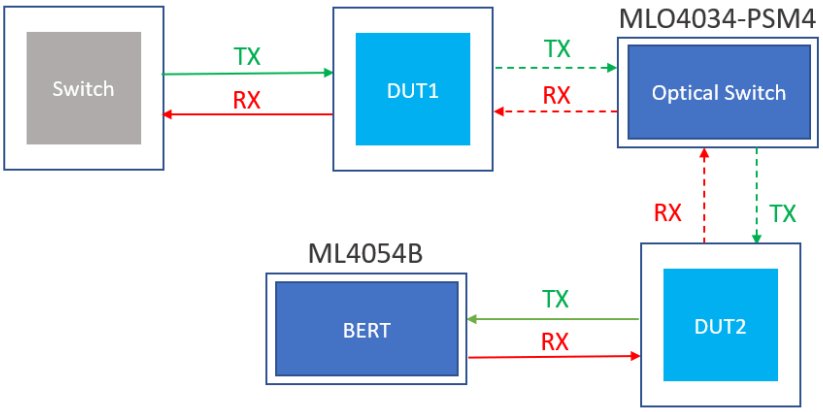

Innovation for the next generation

CMIS Testing

Prevent a CMIS mismatch with your customers or vendors using MultiLane's specialized CMIS testing. Configurable for CMIS 3.0 and 4.0, and available for QSFP-DD, OSFP, QSFP28, and SFP form factors, our ML4066 adapter and analyzer will find any gap between the host and module, and minimize uncertainty in CMIS implementations. MultiLane's CMIS one pager provides a full overview of our CMIS testing solutions.

CMIS Testing Setup

A low-speed I2C electrical signal is sent from the switch through the CMIS analyzer board to the DUT and then looped back. The CMIS Analyzer monitors the exchange between host and module.

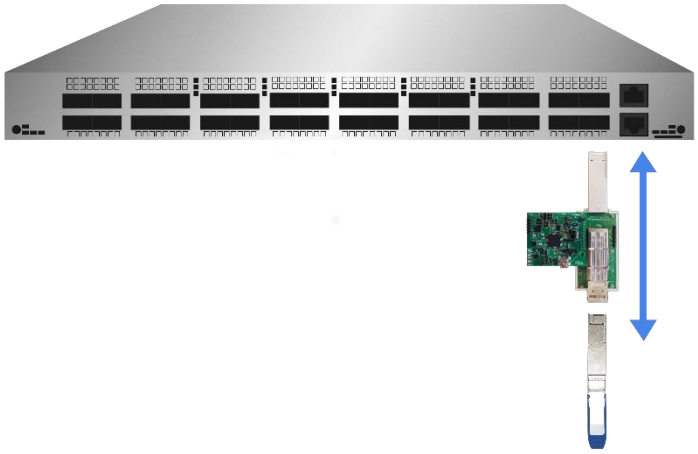

Innovation for the next generation